DRG. No.	W28GD008/3
DRG. REF.	

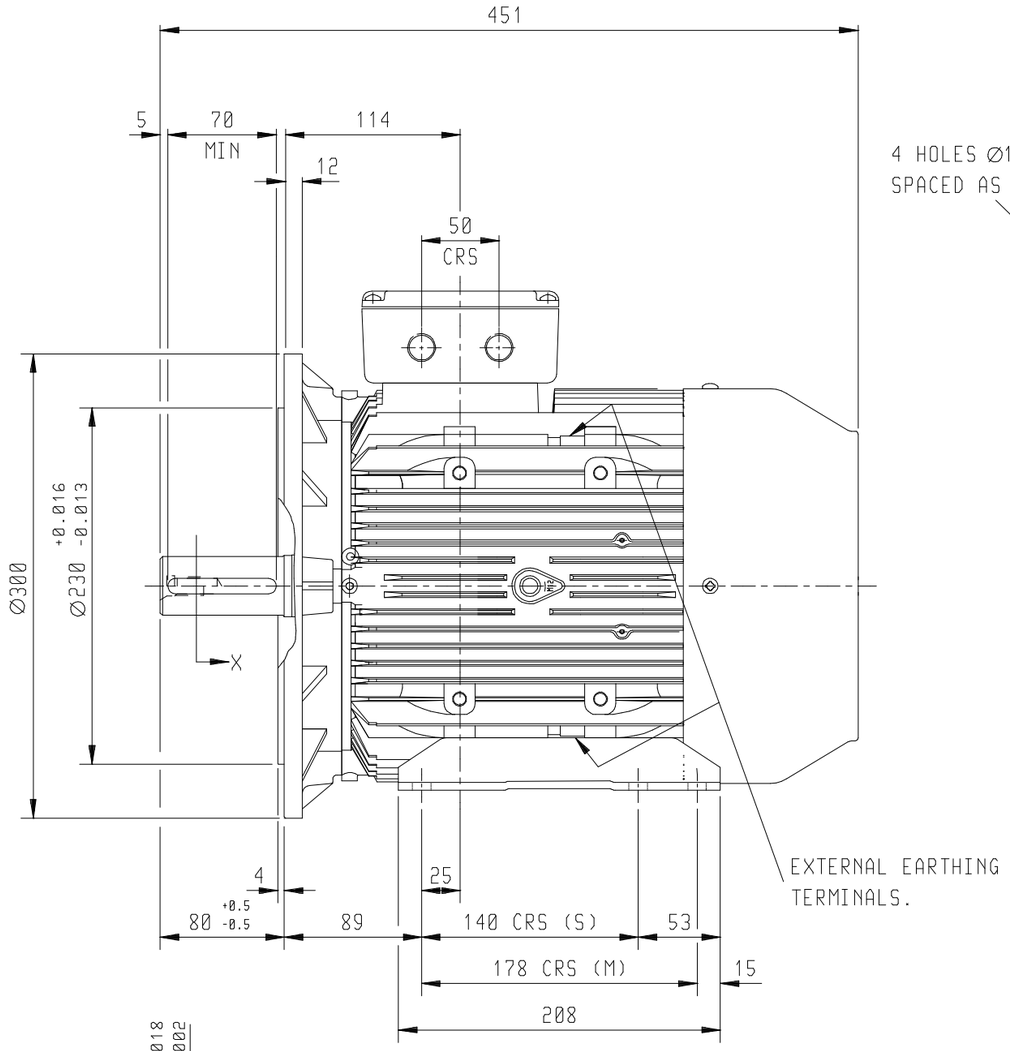

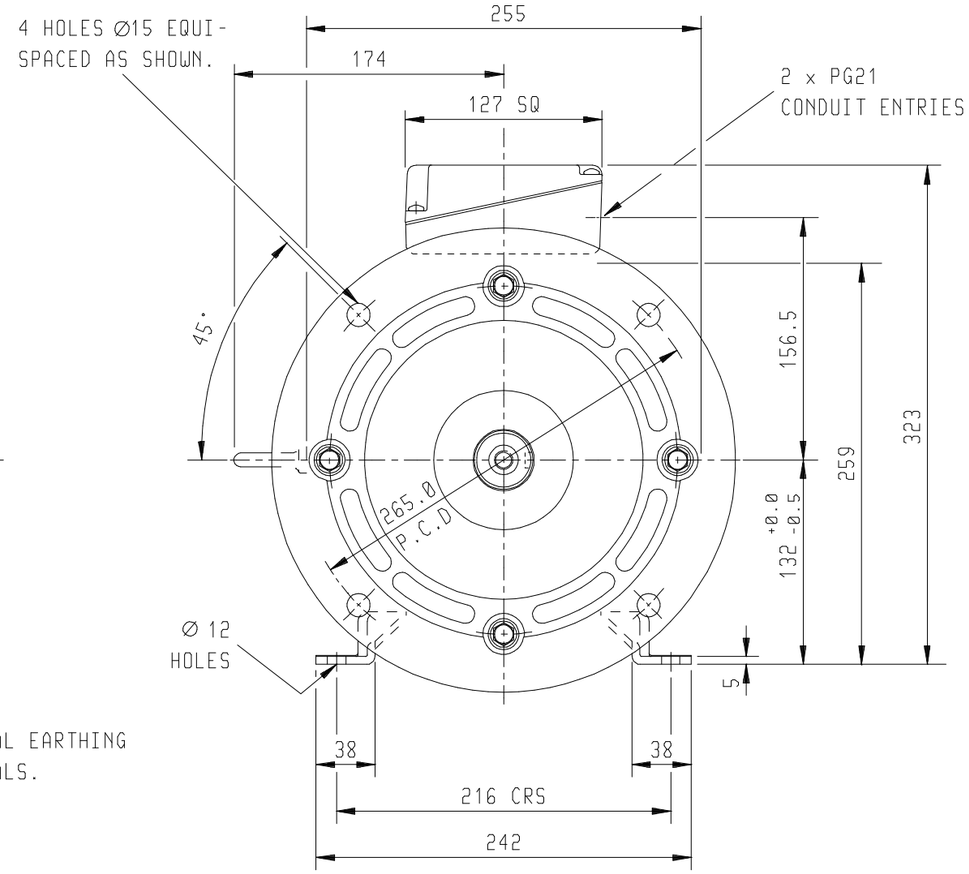

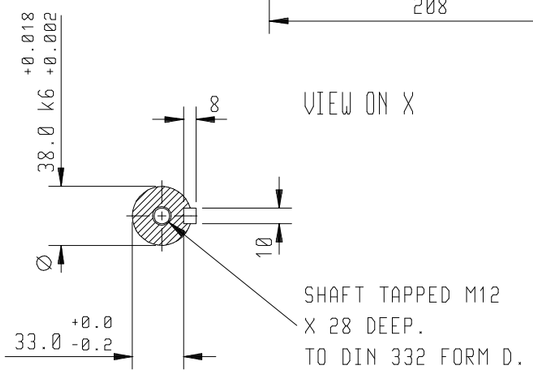

MOTORS CAN BE SUPPLIED WITH OR WITHOUT FEET. FRAME SIZE WILL BE SUFFIX 'D' IN PLACE OF 'H'

TERMINAL BOX POSITION:- CAN BE ARRANGED EITHER AT 9,12 OR 3 O'CLOCK BY MOVING FEET

STANDARD TERMINAL BOX POSITION IS 12 O'CLOCK AS SHOWN

CONDUIT ENTRIES:- TERMINAL BOX CAN BE ROTATED AT 90° INTERVALS

(CONDUIT POSITION SHOWN FOR ILLUSTRATION ONLY)

CUSTOMER			
ORDER No.			
PART No.			
OUR ORDER No.			
FRAME SIZE			
KW.		RPM.	
Hz		PHASE	
VOLTS		POLES	
BRGS.	DE.		NDE.
MOTOR NETT WT.			Kg.
SPECIAL REMARKS			

ALL DIMENSIONS ARE IN MILLIMETRES

FIRST ANGLE PROJECTION

BROOK CROMPTON

Small Industrial Motors
Huddersfield, W.Yorkshire, HD1 3LJ

SHEET SIZE	TITLE		NAME	DATE	
A3	OUTLINE DIMENSION DRAWING W ALUMINIUM TOTALLY ENCLOSED FAN COOLED 132 FRAME FOOT MOUNTED MOTOR TERMINAL BOX TOP FOR K.S.B (DIN TOLERANCES)	DRAWN	RS	05/08/96	DRG. No. W28GD008/3
		CHECKED	J.W.D	05/08/96	DRG. REF.
		SCALE	1 : 4.0		REVISION: DH DATE 06/08/03